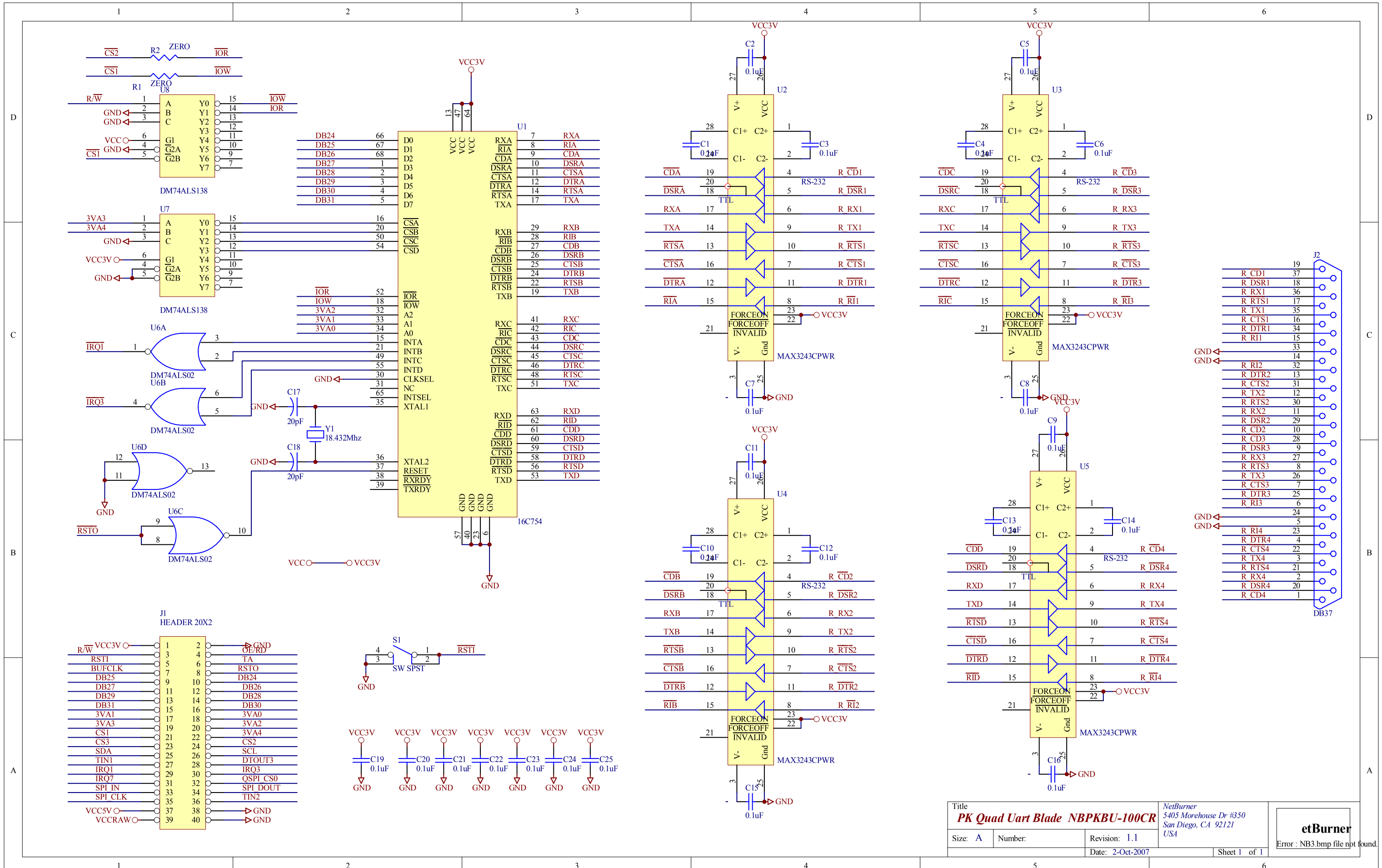

Title
PK Quad Uart Blade NBPKBU-100CR

Size: A | Number: | Revision: 1.1

Date: 2-Oct-2007 | Sheet 1 of 1

NetBurner
5405 Morehouse Dr #350
San Diego, CA 92121
USA

etBurner

Error : NB3.bmp file not found.